RESEARCHERID
THOMSON REUTERS
[Prateek, 4(12), Dec 2019]

ISSN : 2455-9679
Impact Factor : 3.340

IJRTSM

INTERNATIONAL JOURNAL OF RECENT TECHNOLOGY SCIENCE & MANAGEMENT

"CFD ANALYSIS OF TANGENTIAL VELOCITY IN SINGLE INLET CYCLONE SEPARATOR IN INDUSTRY BY USING ANSYS SOFTWARE"

Prateek Chouhan [1], Yogesh Kumar Tembhurne [2]

[1] P.G.Scholar, Dept. of Mechanical Engineering, B.E.R.I., Bhopal, MP, India

[2] Assistant Professor, Dept. of Mechanical Engineering, B.E.R.I., Bhopal, MP, India

ABSTRACT

The cyclone separators are generally utilized in the expulsion of residue particles from the gas stream in modern procedures. Violent wind dust separators have been utilized in ventures to isolate dust particles from the gas strong stream and assistant decrease the air contamination happening because of the smokestack smoke in the substance plant. ANSYS software used for CFD analysis are carried out for both inlet cyclone 30 degree and inlet cyclone 45 degree separator under the same condition of inlet velocity, flow rate and particle diameter. Find out value for tangential inlet cyclone 30° degree Turbulence kinetic energy, Wall velocity, cyclone Wall temperature, Inner Wall temperature, heat transfer coefficient and particle mass concentration are respectively 7.347m^2/sec^2, 43.79 m/sec , 330 K, 330 K , 142.5 w/m^2/K and 1.534 E^{-17}. Find out value for tangential inlet cyclone 45° degree Turbulence kinetic energy, Wall velocity, cyclone Wall temperature, Inner Wall temperature, heat transfer coefficient and particle mass concentration are respectively 5.915m^2/sec^2, 44.48m/sec 0, 323 K, 323 K , 126.5 w/m^2/K and 1.10 E^{-17}.The results of tangential velocity vector show an increase in the tangential velocity in the cyclone body. Maximum tangential velocity for the single cyclone 45^0 design is 44.48 m/s, and for 30^0 cyclone design is 43.79 m/s.

Keyword: *Turbulence kinetic energy, Wall velocity, cyclone Wall temperature, Inner Wall temperature, heat transfer coefficient, particle mass concentration.*

I. INTRODUCTION

1.1Introduction : The twister separators are generally utilized in the expulsion of residue particles from the gas stream in modern procedures. Violent wind dust separators have been utilized in ventures to isolate dust particles from the gas strong stream and assistant decrease the air contamination happening because of the smokestack smoke in the substance plant (Ogawa 1997). The tornado separators are the most hearty residue separators. In an old style violent wind separator the residue gas enters digressively and powers the stream to pursue winding movement. In this way the made divergent power powers the residue molecule towards the mass of the twister. Subsequent to striking the mass of tornado, the particles tumbled down and isolated

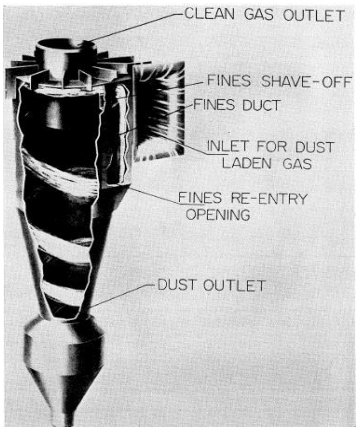

Figure 1.1 cyclone separator

ISSN : 2455-9679
Impact Factor : 3.340

1.2 Classification of separators

Because of the referenced points of interest, twisters have discovered application in for all intents and purposes each industry where there is a need to expel particles from a gas stream. displays a few Examples of violent winds mechanical applications with wide scope of "N" sizes, areas and applications. Today, twister separators are found in:

1. Ship emptying establishments
2. Power stations and shower dryers fluidized bed and reactor riser frameworks, (for example, synergist wafers and cockers)
3. Synthetic cleanser creation units
4. Food preparing plants smashing, partition, crushing and calcining activities in the mineral and synthetic businesses
5. Vacuum cleaning machines
6. Dust inspecting gear

1.3 Types of dust collectors

Five primary kinds of modern residue gatherers are:

1. Inertial separators
2. Fabric filter
3. Wet scrubbers
4. Unit authorities
5. Electrostatic precipitators

1.4 Problem Statement:

1. High differential pressure
2. Improperly fitted bags
3. Using dirty bags that need replacement
4. Leaks in system
5. The overall pressure drop of the cyclone system and higher pressure value can be a disadvantage in such cyclone system design. So Cyclone efficiency can also be decreased.

II. METHODOLOGY

2.1 Cyclone Design Geometry

The violent wind geometry is built by utilizing Stairmand's high proficiency twister plan strategy. Stairmand led such a large number of trials on the typhoon separator lastly built up the improved geometrical proportions. By considering this geometric proportion's the demonstrating of the violent wind done in catia V5.

Take Dc=0.30 meter, which is similarly sheltered as it is near standard size width of 0.203 meter Thus, the component of the plan typhoon is as under Stairmand's structure,

Dc=diameter of cyclone=0.30 m

Stature of bay pipe

Hi=0.5 Dc=0.5x0.3=0.15m

Width of bay duct=wi=0.2

Dc =0.2x0.30=0.06 m

Breadth of out let duct=D0=0.5

Dc =0.5x0.3=0.15m

Breadth of residue outlet

Dd=0.375xDc =0.375x0.3=0.11m

ISSN : 2455-9679
Impact Factor : 3.340

Length of violent wind fundamental body
(1.5Dc) =1.5x0.3=L1=0.45m
Length of violent wind container
= 2.5Dc=2.5x0.3=L2=0.75m
All out length of cyclone=L1+L2=1.2m

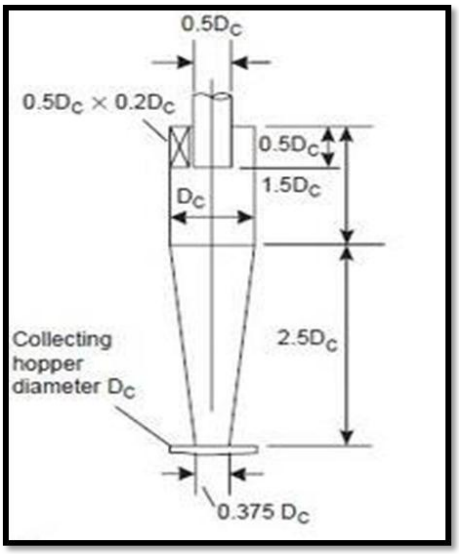

Fig. 2.1 2D drafting cyclone model

III. BOUNDARY CONDITIONS

In the CFD simulations the following boundary conditionswere set in Fluent ANSYS (Fluent (2019)):

Material cyclone = Aluminium Alloy
Inlet: velocity inlet = 15 m/s
Outlet: pressure outlet= 101103 Pa
Wall: standard wall function
Temperature = 323 K
(Desecrate phase model) DPM = Reflect

IV. CONCLUSION

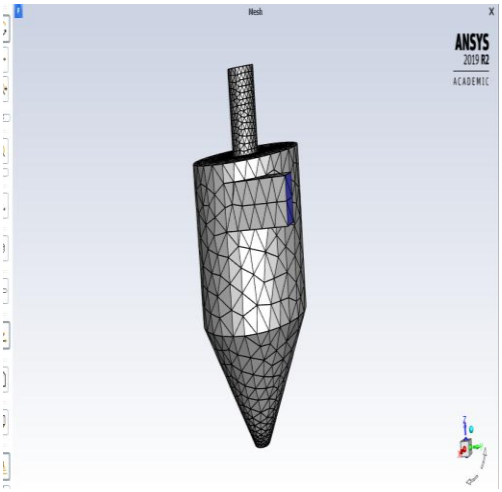

Fig. 4.1 Meshing of Cad Model

ISSN : 2455-9679
Impact Factor : 3.340

V. RESULTS

5.1 Cyclone 30 degree results

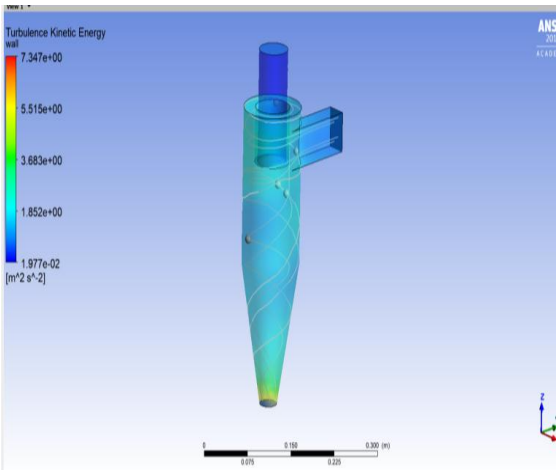

Fig 5.1 Result of Turbulence Kinetic Energy at 30^0 inclination angle of cyclone separator

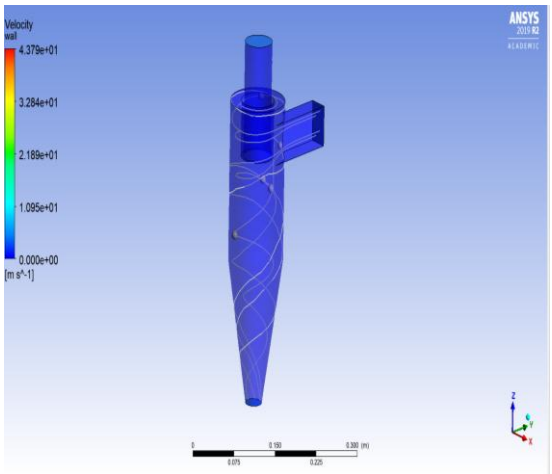

Fig 5.2 Result of Velocity at 30^0 inclination angle

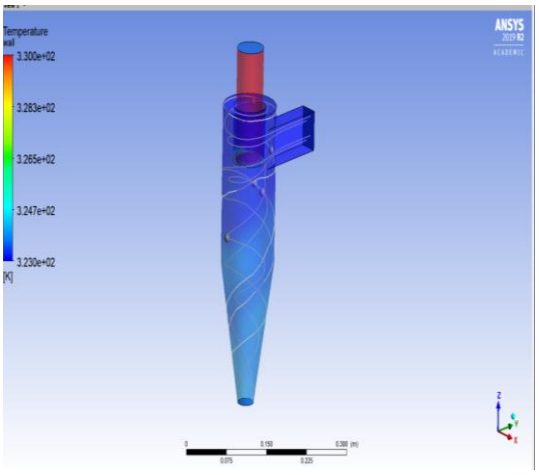

Fig 5.3 Result of Temperature at 30^0 inclination angle of cyclone separator

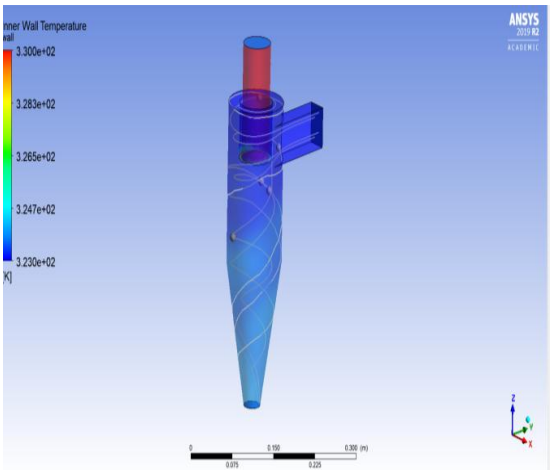

Fig 5.4 Result of Inner wall Temperature at 30^0 inclination angle of cyclone separator

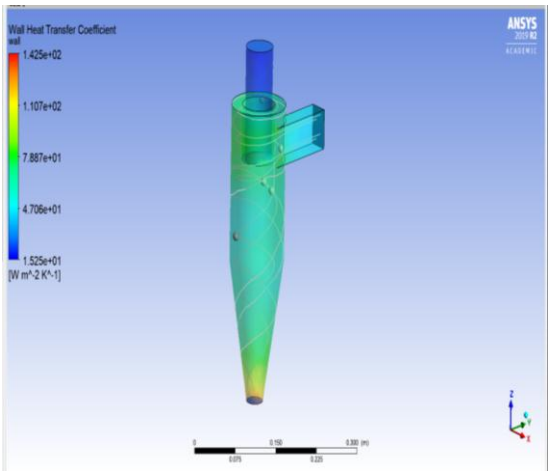

Fig 5.5Result of wall heat transfer coefficient at 30^0 inclination angle of cyclone separator

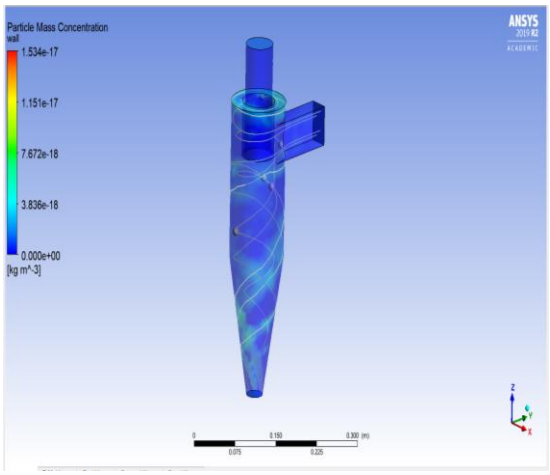

Fig.5.6 Result of Particle mass concentration at 30^0 inclination angle of cyclone separator

ISSN : 2455-9679
Impact Factor : 3.340

5.2 Cyclone 45 degree results

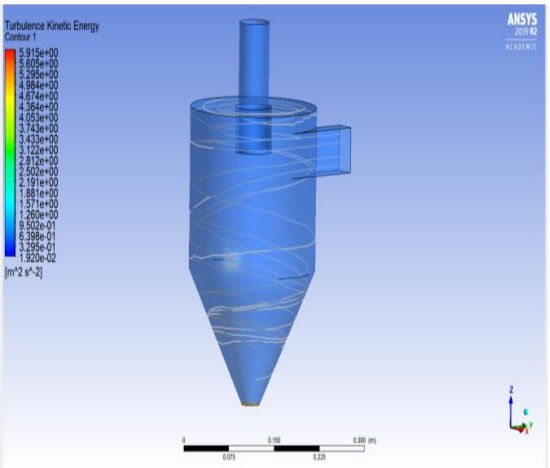

Fig.5.7 Result of Turbulence Kinetic Energy at 45^0 inclination angle of cyclone separator

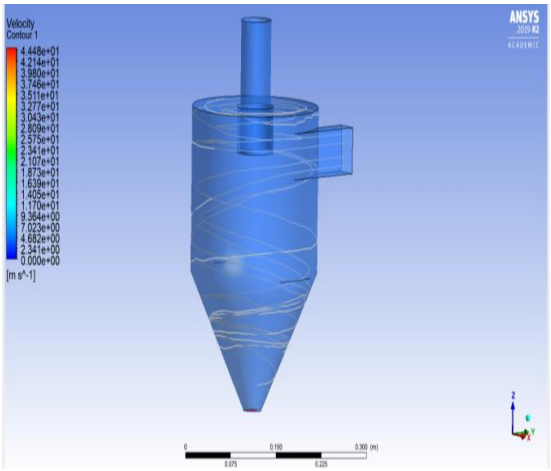

Fig.5.8 Result of Velocity at 45^0 inclination angle of cyclone separator

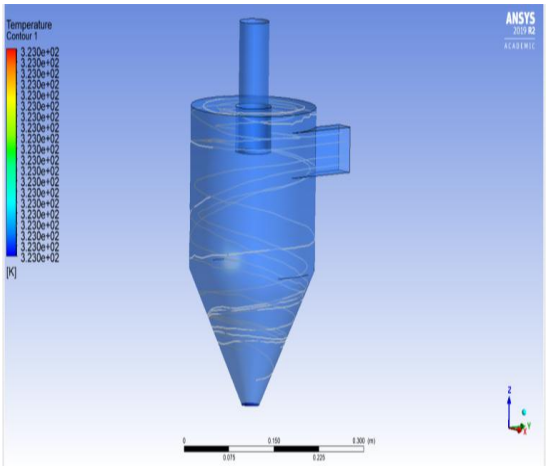

Fig.5.9 Result of Temperature at 45^0 inclination angle of cyclone separator

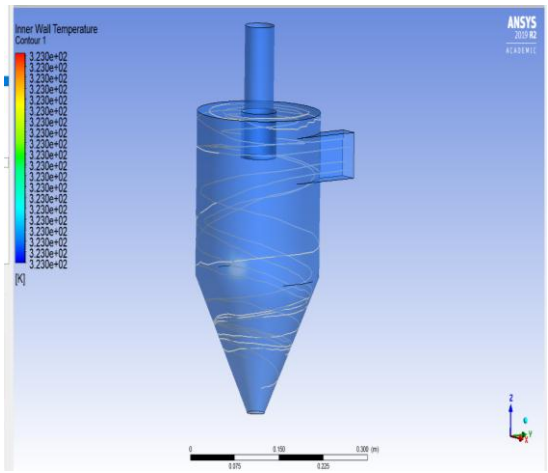

Fig.5.10 Result of Inner wall Temperature at 45^0 inclination angle of cyclone separator

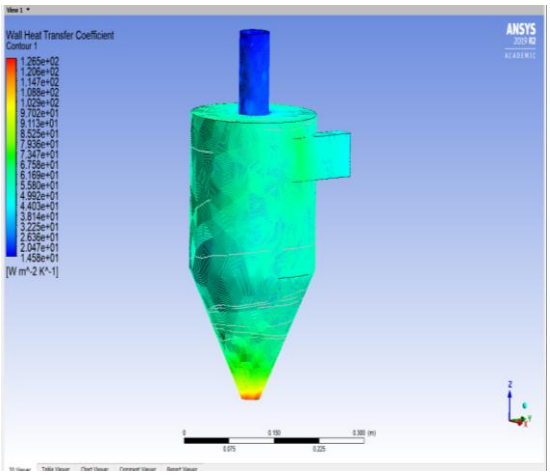

Fig.5.11 Result of wall heat transfer coefficient at 45^0 inclination angle of cyclone separator

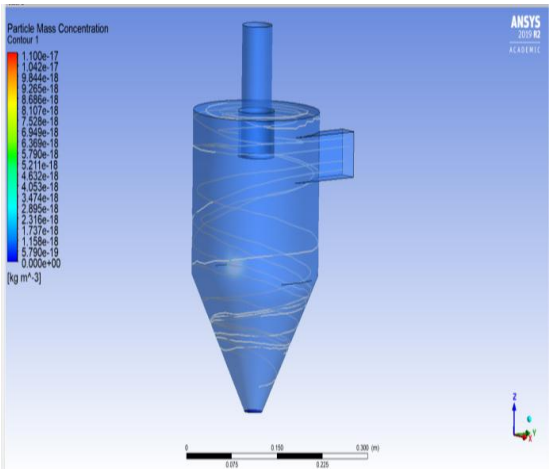

Fig.5.12 Result of Particle mass concentration at 45^0 inclination angle of cyclone separator

ISSN : 2455-9679
Impact Factor : 3.340

VI. RESULTS & DISCUSSION

The Computation Fluid Dynamics (CFD) analysis is carried out for both inlet cyclone 30 degree and inlet cyclone 45 degree separator under the same condition of inlet velocity, flow rate and particle diameter.

We have found out value for tangential inlet cyclone 30 degree Turbulence kinetic energy, Wall velocity, cyclone Wall temperature, Inner Wall temperature, heat transfer coefficient and particle mass concentration are respectively $7.347 m^2/sec^2$, 43.79 m/sec , 330 K, 330 K , 142.5 $w/m^2/K$ and 1.534 E^{-17}.

We have found out value for tangential inlet cyclone45 degree Turbulence kinetic energy, Wall velocity, cyclone Wall temperature, Inner Wall temperature, heat transfer coefficient and particle mass concentration are respectively $5.915 m^2/sec^2$, 44.48m/sec 0, 323 K, 323 K , 126.5 $w/m^2/K$ and 1.10 E^{-17}.

So here we can see that velocity 30 degree cyclone separator more than 45 degree cyclone separator so we will be selected 45^0 cyclone separator. Because its have higher efficiency compare to 30^0 cyclone separator.

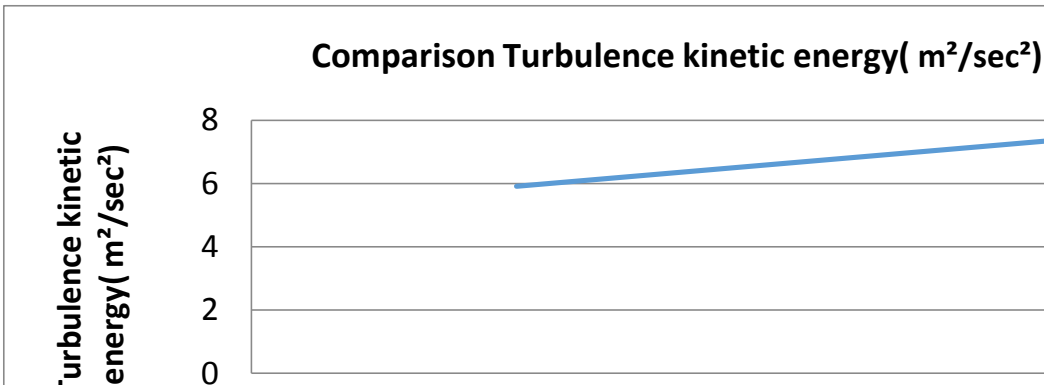

Fig. 6.1 Comparison chart for cyclone Turbulence kinetic energy

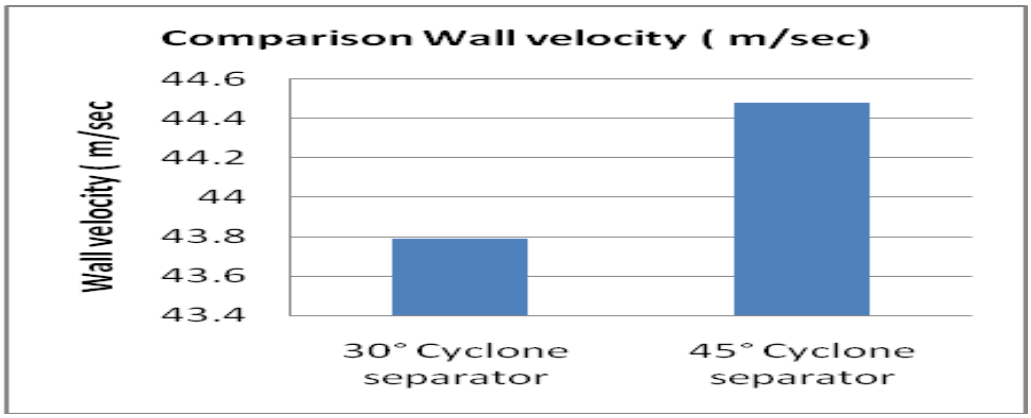

Fig. 6.2 Comparison chart for cyclone wall velocity m/Sec

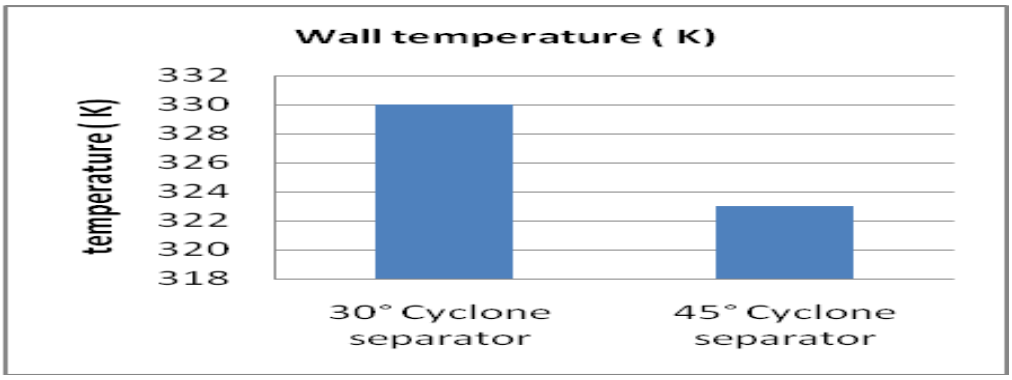

Fig. 6.3 Comparison chart for cyclone wall temperature

ISSN : 2455-9679
Impact Factor : 3.340

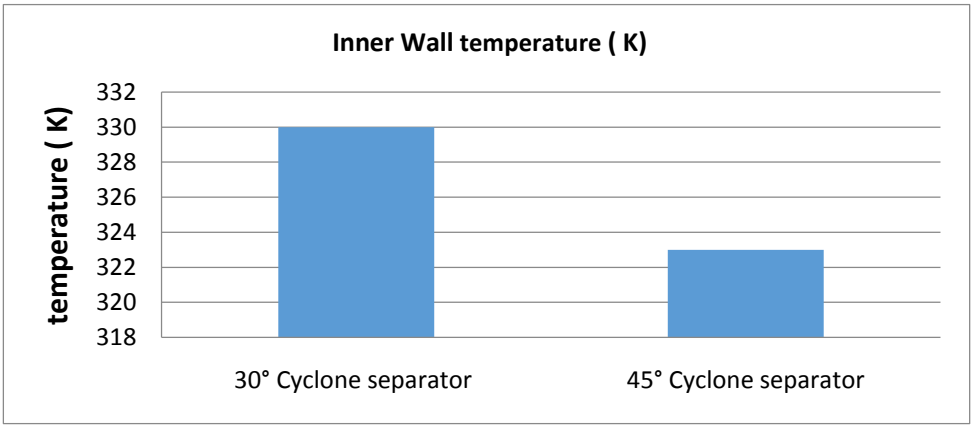

Fig. 6.4 Comparison chart for cyclone wall temperature

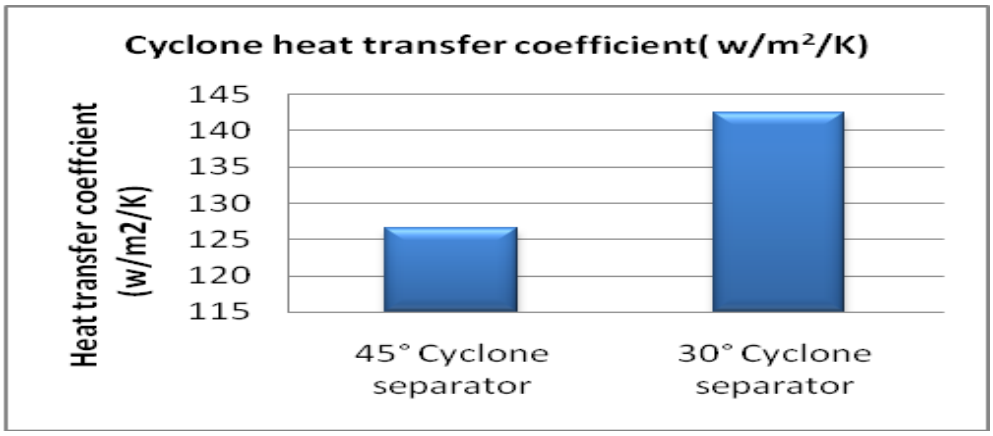

Fig. 6.5 Comparison chart for cyclone heat transfer coefficient

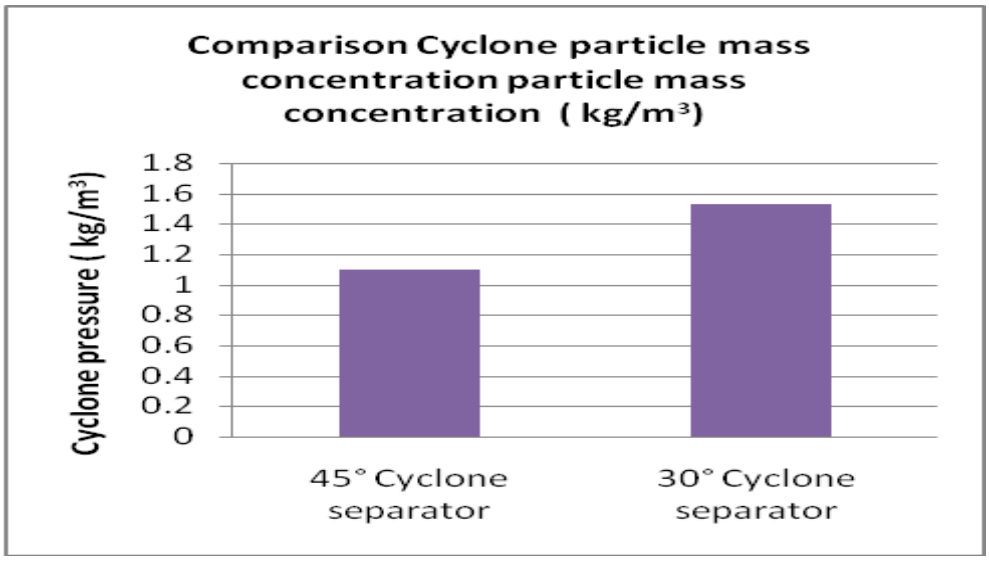

Fig. 6.6 Comparison chart for cyclone particle mass concentration

ISSN : 2455-9679
Impact Factor : 3.340

VII. CONCLUSION

7.1 Conclusion

The Computation Fluid Dynamics (CFD) analysis is carried out for both single inlet cyclone 30 degree and inlet cyclone 45 degree separator under the same condition of inlet velocity, flow rate and particle diameter.

The results tangential inlet cyclone, the tangential velocity which relates to will be increased which accounts for the better cyclone efficiency. The collection efficiency for the modified cyclone geometry is more than the standard cyclone design.

1. The results of pressure contour show uniform distribution of pressure throughout the cyclone body as compared to the standard design.
2. The results of tangential velocity vector show an increase in the tangential velocity in the cyclone body. Maximum tangential velocity for the single cyclone 45^0 design is 44.48 m/s, and for 30^0 cyclone design is 43.79 m/s. This shows an increase in the tangential velocity.

Validation: Our results have validated with base paper author ***Abhijeet Gayakwad , Dr.Shivarudraiah. They had found result on cyclone separator since 2017.***

The results of tangential velocity vector show an increase in the tangential velocity in the cyclone body. Maximum tangential velocity for the single cyclone design is 18 m/s, and for symmetrical cyclone design is 23 m/s. This shows an increase in the tangential velocity. But we have gotten better result with previous author our base paper like the results of tangential velocity vector show an increase in the tangential velocity in the cyclone body. Maximum tangential velocity for the single cyclone 45^0 designs is 44.48 m/s, and for 30^0 cyclone designs is 43.79 m/s. This shows an increase in the tangential velocity. Because maximum velocity we have found out.

REFERENCES

1. Ali Sakina, IrfanKaragozb, AtakanAvcib" Performance analysis of axial and reverse flow cyclone separators" Chemical Engineering & Processing: Process Intensification 144 (2019)
2. Harsh patel and Ankitdarji "A review paper on a design and analysis of cyclone separator for high efficiency by using cfd analysis" indian journal of research" Volume-7 | Issue-4 | April-2018
3. Prachi k. Ithape, S. B. Barve, S. S. Pande& and A. R. Nadgire "effect of geometric parameters on the exhibition of violent wind separator utilizing CFD".IJCET. E-ISSN 2277 – 4106 pp, 288-292., 2017
4. W.I. Mazyana, A. Ahmadib, H. Ahmedc, M. Hoorfara" increasing efficiency of natural gas cyclones through addition oftangential chambers" "ELSEVIER. 36-42., 2017
5. AbhijeetGayakwad1 , Dr.Shivarudraiah2 "CFD Analysis of Symmetrical Tangential Inlet Cyclone Separator" International Research Journal of Engineering and Technology (IRJET), Volume: 04 Issue: 08 | Aug -2017
6. J.J.H. Houben1†, Ch. Weiss2, E. Brunnmair "CFD Simulations of Pressure Drop and Velocity Field in a Cyclone Separator with Central Vortex Stabilization Rod" Journal of Applied Fluid Mechanics , Vol. 9, No. 1, pp. 487-499, 2016.
7. Mahesh r jadhav."design of violent wind and investigation of its exhibition parameters." IJMERR. ISSN 2278 – 0149.Vol. 3(4).247-252, 2014
8. P.A. Funk. "reducing typhoon pressure drop with evasé". ELSEVIER. 276-281., 2014
9. Selamidemir."apractical model for evaluating pressure drop in tornado separators:an test study".ELSEVIER.329-338, 2014
10. Zhiyixiong ,zhongliji , xiaolinwu."Development of a violent wind separator with high productivity and low weight drop in pivotal delta cyclones". ELSEVIER. 644-649, 2013.
11. Sujeet Kumar Shukla, PrashantShukla, PradyumnaGhosh, "The effect of modeling of velocity fluctuationson prediction of collection efficiency of cycloneseparators" (Applied Mathematical Modelling 37(2013)
12. H. Safikhani, A. Hajiloo, M.A. Ranjbar, and N. Nariman-Zadeh. Modeling and multi-objective optimization of cyclone separators using CFD and genetic algorithms. Computers & Chemical Engineering, 35(6):1064–1071, 2011.

ISSN : 2455-9679
Impact Factor : 3.340

13. Abolfazl Khalkhalia and Hamed Safikhania. Pareto based multiobjective optimization of a cyclone vortex finder using CFD, GMDH type neural networks and genetic algorithms. Engineering Optimization, , Available online: 05 Jul 2011, 2011
14. Ferit Ficici, Vedat Ari, and Murat Kapsiz. The effects of vortex finder on the pressure drop in cyclone separators. International Journal of the Physical Sciences, 5(6):804–813, 2010
15. S. I. Pishbin and M. Moghiman. Optimization of cyclone separators using genetic algorithm. International Review of Chemical Engineering (I.RE.CH.E.), 2(6):683–690, 2010.
16. H. Safikhani, S.A. Nourbakhsh, and N. Nariman-zadeh. Modeling and multi-objective optimization of cyclone vortex finder using CFD and neural networks. In 2nd International Conference on Engineering Optimization, September 6-9, 2010, Lisbon, Portugal, pages 1–9, 2010
17. P. K. Swamee, N. Aggarwal, and K. Bhobhiya. Optimum design of cyclone separator. American Institute of Chemical Engineers (AIChE), 55(9):2279–2283, 2009.er).
18. Jin You-hai, Ji Guang-qin, Cao Qing-yun, and Wang Jian-jun. Numerical simulation of gas-phase flow field in vortex finder of cyclone separators. Journal of China University of Petroleum, 32(6):109–12, 2008.
19. R. B. Xiang and K. W. Lee. Numerical study of flow field in cyclones of different height. Chemical Engineering and Processing, 44:877– 883, 2005.
20. Stefan Obermair, Jakob Woisetschlager, and Gernot Staudinger. Investigation of the flow pattern in different dust outlet geometries of a gas cyclone by laser doppler anemometry. Powder Technology, 138:239–251, 2003.
21. G. Ravi, Santosh K. Gupta, and M. B. Ray. Multiobjective optimization of cyclone separators using genetic algorithm. Ind. Eng. Chem. Res., 39:4272–4286, 2000.
22. J. Hoekstra. Gas flow field and collection efficiency of cyclone separators. PhD thesis, Technical University Delft, 2000.
23. P. J. Roache. Perspective: A method for uniform reporting of grid refinement studies. Journal of Fluids Engineering, 116(3):405–413, 1994.
24. D. C. Wilcox. Turbulence Modeling for CFD. DCW Industries, Inc, 2nd ed. edition, 1994.
25. M. E. Moore and A. R. McFarland. Performance modeling of singleinlet aerosol sampling cyclones. Environmental Science and Technology, 27(9):1842–1848, September 1993.
26. M. Germano, U. Piomelli, P. Moin, and W. H. Cabot. A dynamic subgrid-scale eddy viscosity model. Physics of Fluids A, 3(7):1760– 1765, 1991.
27. J. C. Kim and K. W. Lee. Experimental study of particle collection by small cyclones. Aerosol Science and Technology, 12:1003–1015, 1990.
28. F. Boysan, W.H. Ayer, and J. A. Swithenbank. Fundamental mathematical-modelling approach to cyclone design. Transaction of Institute Chemical Engineers, 60:222–230, 1982.