ISSN : 2455-9679
Impact Factor : 1.389

IJRTSM

INTERNATIONAL JOURNAL OF RECENT TECHNOLOGY SCIENCE & MANAGEMENT

"A REVIEW ON UREA SCR TECHNOLOGY"

Sandeep Badlani,[1], MD. Irshad,[2] Ajay Sikarwar[3], Ajay Bhargava[4]

[1,2,3]Assistant Professor, Mechanical Engineering, Acropolis Technical Campus, Indore,(M.P.), India
[4]Professor, Mechanical Engineering, Acropolis Technical Campus, Indore,(M.P.), India

ABSTRACT

Emission controls is currently, one of the biggest challenges and concern in the automotive industry for cleaner diesel engines. Selective catalytic reduction (SCR) technology is currently, one of the most feasible solutions. SCR technology uses diesel exhaust uid (DEF) which is a urea solution of 32.7% urea with 67.3% water to reduce NOx emission. The urea solution is converted to ammonia (NH3) which reacts with NOx over a catalyst to form N2 and water. In this project, a practical and dynamic model for modeling and controlling ammonia surface coverage or storage on a selective catalytic reduction (SCR) system with a Aluminium oxide catalyst is implemented. In the Selective Catalytic Reduction (SCR) process, NOx reacts with ammonia, which is injected into the ue gas stream before the catalyst. Different SCR catalyst systems based on platinum, vanadium oxide or zealots have different operating temperature windows and must be carefully selected for a particular SCR process. Ammonia-SCR has been used for years in industrial processes, in stationary diesel engine applications, as well as in marine engines. Urea-SCR technology, using urea as the ammonia precursor, is being adapted for mobile diesel engines.

KEYWORDS : *Emmision, SCR, Ammonia UREA, Catalyst,.*

I. INTRODUCTION

Selective catalytic reduction (SCR) of NOx by nitrogen compounds, such as am-monia or urea commonly referred to as simply SCR has been developed for and well proven in industrial stationary applications. The SCR technology was rst applied in thermal power plants in Japan in the late 1970s, followed by widespread appli-cation in Europe since the mid-1980s. In the USA, SCR systems were introduced for gas turbines in the 1990s, with increasing potential for NOx control from coal-red power plants. In addition to coal-red cogeneration plants and gas turbines, SCR applications also include plant and re nery heaters and boilers in the chemi-cal processing industry, furnaces, coke ovens, as well as municipal waste plants and incinerators. The list of fuels used in these applications includes industrial gases, natural gas, crude oil, light or heavy oil, and pulverized coal. The application of SCR for mobile diesel engines requires overcoming several problems, which are dis-cussed later. However, SCR remains the only proven catalyst technology capable of reducing diesel NOx emissions to levels required by a number of future emission standards. First commercial diesel truck applications were launched in 2004 by Nis-san Diesel in Japan [Hirata 2005] and by DaimlerChrysler in Europe. SCR systems are also being developed in the USA in the context of the 2010 NOx limit of 0.2 g/bhp-hr for heavy-duty engines, as well as the Tier 2 NOx standards for light-duty vehicles. However, the US clean air authorities have voiced concerns about the SCR technology. From the regulatory perspective SCR poses enforcement problems, both in terms of ensuring that the reductant (urea) is available together with diesel fuel throughout the nationwide

ISSN : 2455-9679
Impact Factor : 1.389

distribution network, and that it is always timely replenished by vehicle operators.

II. Literature Survey

Yoichi Niki, Koichi Hirata, and Takeyuki Kishi study on SCR system for NOx reduction of Medium Speed Marine Diesel Engine in 2010 at National Maritime Research Institute, Japan One of advantages of a marine Diesel engine is that the engines can use low-quality heavy oil with high e ciency. However, one of dis-advantages is that NOx emission of the marine Diesel engine is greater than the other internal combustion engines on the ground, such as automotives and electric power plants. The NOx emission causes acid rain and photochemical smog, and it in uences directly to human health, such as respiratory disease. In particular, to protect air environment quality in harbor areas, we must reduce the NOx emission. Furthermore, Annex VI of MARPOL 73/78 regulations which regulates by the IMO (International Maritime Organization) took e ect in May 2005. Severe requirements of NOx reduction such as Tier II and Tier III will be enforced in 2011, 2016. In the Tier III regulations, The NOx limit will be reduced 80have started to study on a SCR (Selective Catalytic Reduction) system for fore-stroke medium speed marine Diesel engine since 2007 in order to develop NOx reduction technologies [1]

Rinie van Helden, Ruud Verbeek and Frank Willems study on Optimization of Urea SCR deNOx Systems for HD Diesel Engines, in Europe heavy duty vehicle manufacturers will introduce urea SCR deNOx after treatment when Euro-4 legis-lation become e ective in 2005/2006. Primary motivations for urea SCR are fuel consumption and reliability. The high NOx reduction of the catalyst allow the engine to be optimized for low fuel consumption and low particulate emission. In this way, a maintenance-intensive particulate lter can be avoided. Beside NOx reduction most SCR catalysts have HC oxidation capabilities, resulting in lower particulate emission [2]

Duncan Arrowsmith, Aden Bott and Phillip Bush study on Development of a Compact Urea-SCR+CRT System for Heavy-Duty Diesel using a Design of Experi-ments Approach. Environmental and health issues are continually driving emissions legislation to enforce stricter emissions limits. In Europe, Euro IV (2005) and V (2008) emissions legislation and proposed Low Emissions Zones (LEZs) in London and other European cities similar to the scheme already implemented in major cities in Sweden call for a signi cant reduction in Nitrogen Oxides (NOx) and Particu-late Matter (PM) emissions from Heavy Duty Diesel (HDD) vehicles. Despite the advances in engine development, vehicle manufacturers are still favouring exhaust aftertreatment to meet forthcoming legislation . In Europe urea SCR is the pre-ferred NOx abatement technology for OEMs to achieve Euro IV and V legislation and beyond on HDD applications, due to the proven high performance in service, its cost e ectiveness relative to other NOx reduction technologies and an expanding Adblue infrastructure. In Europe Adblue is becoming commonly available in service stations, vehicle main dealers and depots where required.

III Selective Catalytic Reduction (SCR)

Selective catalytic reduction (SCR) is a means of converting nitrogen oxides, also referred to as NO x with the aid of a catalyst into diatomic nitrogen, N2, and water, H2O. A gaseous reductant, typically anhydrous ammonia, aqueous ammonia or urea, is added to a stream of ue or exhaust gas and is adsorbed[citation needed] onto a catalyst. Carbon dioxide, CO2 is a reaction product when urea is used as the reductant. Selective catalytic reduction of NOx using ammonia as the reducing agent was patented in the United States by the Engelhard Corporation in 1957. Development of SCR technology continued in Japan and the US in the early 1960s with research focusing on less expensive and more durable catalyst agents. The rst large-scale SCR was installed by the IHI Corporation in 1978.Commercial selective catalytic reduction systems are typically found on large utility boilers, industrial boilers, and municipal solid waste boilers and have been shown to reduce NOx by 70-95%. More recent applications include diesel engines, such as those found on large ships, diesel locomotives, gas turbines, and even automobiles.

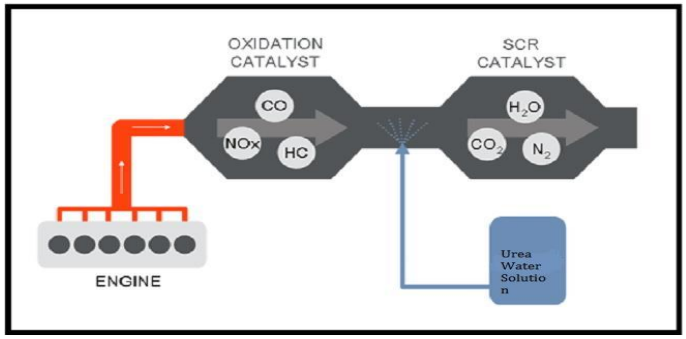

Figure 1: Simple View of Urea-SCR Technology

3.1. Special About SCR

Selective Catalytic Reduction is similar to other diesel emission control technologies in many ways { hardware is

ISSN : 2455-9679
Impact Factor : 1.389

mounted in the exhaust stream relies on catalyst-fostered chemical reactions requires sophisticated electronic controllers can yield high.

3.2. Construction of Urea-SCR

The SCR DENOX unit utilising urea solution as reducing agent normally consists of the following main components:

- urea solution storage tank.
- urea solution metering pump .
- injector nozzle system exhaust gas mixer unit .
- SCR-reactor with catalyst elements NOx analyzer control cabinet .

The flow of urea solution is controlled by an external flow controller (FC), by adjusting the speed of the urea solution metering pump.

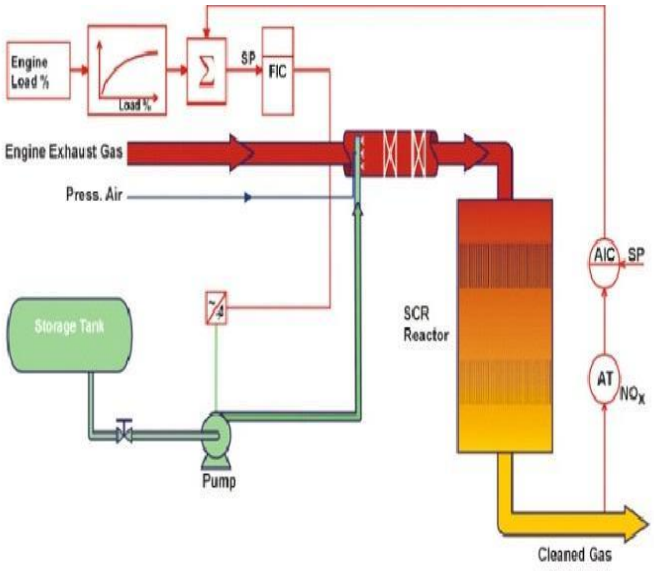

Figure 2: Construction diagram of Urea-SCR

IV. Working of Urea-SCR

This technology is used for reduce NOxof the exhaust gases which passed out from the engine exhaust manifold, so the model of SCR is located after the exhaust manifold and before the silencer.

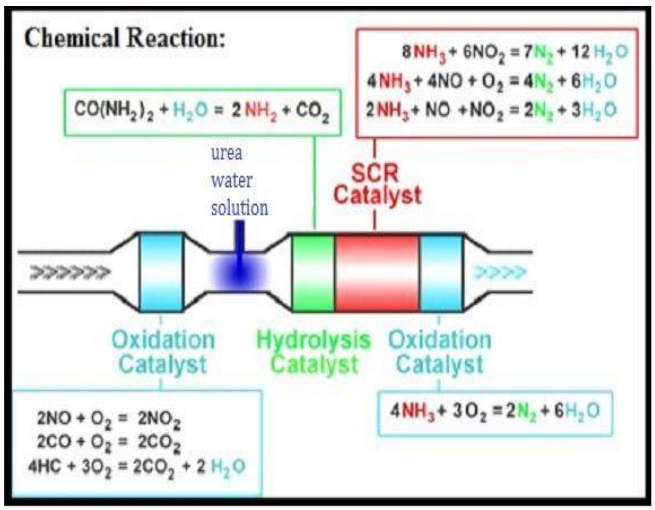

Figure 3: Chemical reaction

When engine is started it creates various toxic gases such as CO2, NOx, CO, PM, SO2.This toxic gases then passes though the chamber where urea is injected by means of injector which is connected to urea reservoir. Urea is injected in appro-priate quantity on the exhaust gases due to which it reacts with them and following reaction takes place.

(NH2) 2CO + H2O = 2NH3 + CO2

In above Hydrolysis reaction takes place in which urea ((NH2) 2CO) is mixed with water (H2O) and generating the ammonia (NH3) and carbon dioxide (CO2). This reaction is formed before the SCR catalyst.

After this gases passes through the SCR which is used to separate the toxic gases from the exhausted gases i.e. ltering the gases and after it, release this clean gases into the environment. When this gases comes into the SCR following reaction takes place in which nitrogen dioxide (NO) is reacted with ammonia (NH3) and oxygen (O2) resulting the nitrogen (N2) and water droplets.

4NO+ 4NH3 + O2 = 4N2 + 6H2O.

In this way, NOx is converting into the nitrogen and small water droplets and enter into the environment. Because of this the pollution is creating due to NOx is reduce and also particles which are generating because of this is not so harmful of human health. So this technology is efficient to reducing pollution.

ISSN : 2455-9679
Impact Factor : 1.389

V. FINAL ASSEMBLY DESIGN

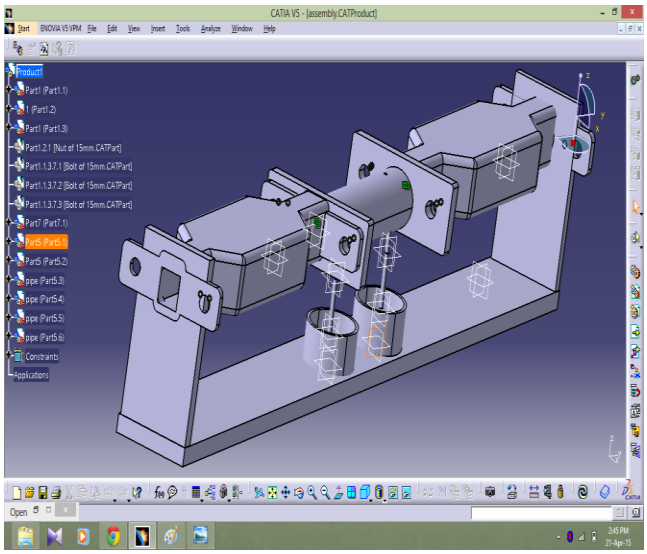

Figure 4: Final Assembly of Urea SCR

VI. CONCLUSION

UREA-SCR technology is effective for minimizing emission. It reduces the NOxup to 80%of the exhausted gases. It also reduces other exhaust particles. SCR is currently the most robust and long-term stable NOx reduction technology. Now-a-days this technology is adapted in many countries. Selective catalytic reduction (SCR) is a means of converting nitrogen oxides, also referred to as NO x with the aid of a catalyst into diatomic nitrogen, N2, and water, H2O. A gaseous reductant, typically anhydrous ammonia, aqueous ammonia or urea, is added to a stream of ue or exhaust gas and is adsorbed[citation needed] onto a catalyst. Carbon dioxide, CO2 is a reaction product when urea is used as the reductant.

REFERENCES

[1] Yoichi Niki, Koichi Hirata, and Takeyuki Kishi , SCR system for NOx reduction of Medium Speed Marine Diesel Engine, in 2010 at National Maritime Research Institute, Japan

[2] Duncan Arrowsmith, Aden Bott and Phillip Bush, Development of a Compact Urea-SCR+CRT System for Heavy-Duty Diesel using a Design of Experiments Approach.

[3] Rinie van Helden, Ruud Verbeek and Frank Willems, Optimization of Urea SCR deNOx Systems for HD Diesel Engines

[4] US Environmental Protection Agency (US EPA), “Determination of Formaldehyde in Ambient Air Using Adsorbent Cartridge Followed by High Performance Liquid Chromatography (HPLC)”, Compendium Method TO-11A, 1999.

[5] Vaaraslahti K., Virtanen, A., Ristimaki, J. and Keskinen, J., “Effect of After-Treatment System on Size Distribution of Heavy Duty Diesel Exhaust Aerosol”, SAE Technical Paper series No. 2004-01-01980, 2004.

[6] Wagner, T. and Wyszynski, M., “Aldehydes and Ketones in Engine Exhaust Emissions-A Review”, Proceedings of the Institution of Mechanical Engineers, 210, 109-122, 1996.

[7] Warner, J.R., Johnson, J.H., Bagley, S.T. and Huynh, C.T., “Effects of a Catalyzed Particulate Filter on Emissions from a Diesel Engine: Chemical Characterization Data and Particulate Emissions Measured with Thermal Optical and Gravimetric Methods”, SAE Technical Paper Series No. 2003-01-0049, 2003.

[8] Wong, C.P., Chan, T.L. and Leung, C.W., “Characterization of Diesel Exhaust Particle Number and Size Distributions Using Mini-dilution Tunnel and Ejector-diluter Measurement Techniques”, Atmospheric Environment Journal, 37, 4435-4446, 2003.